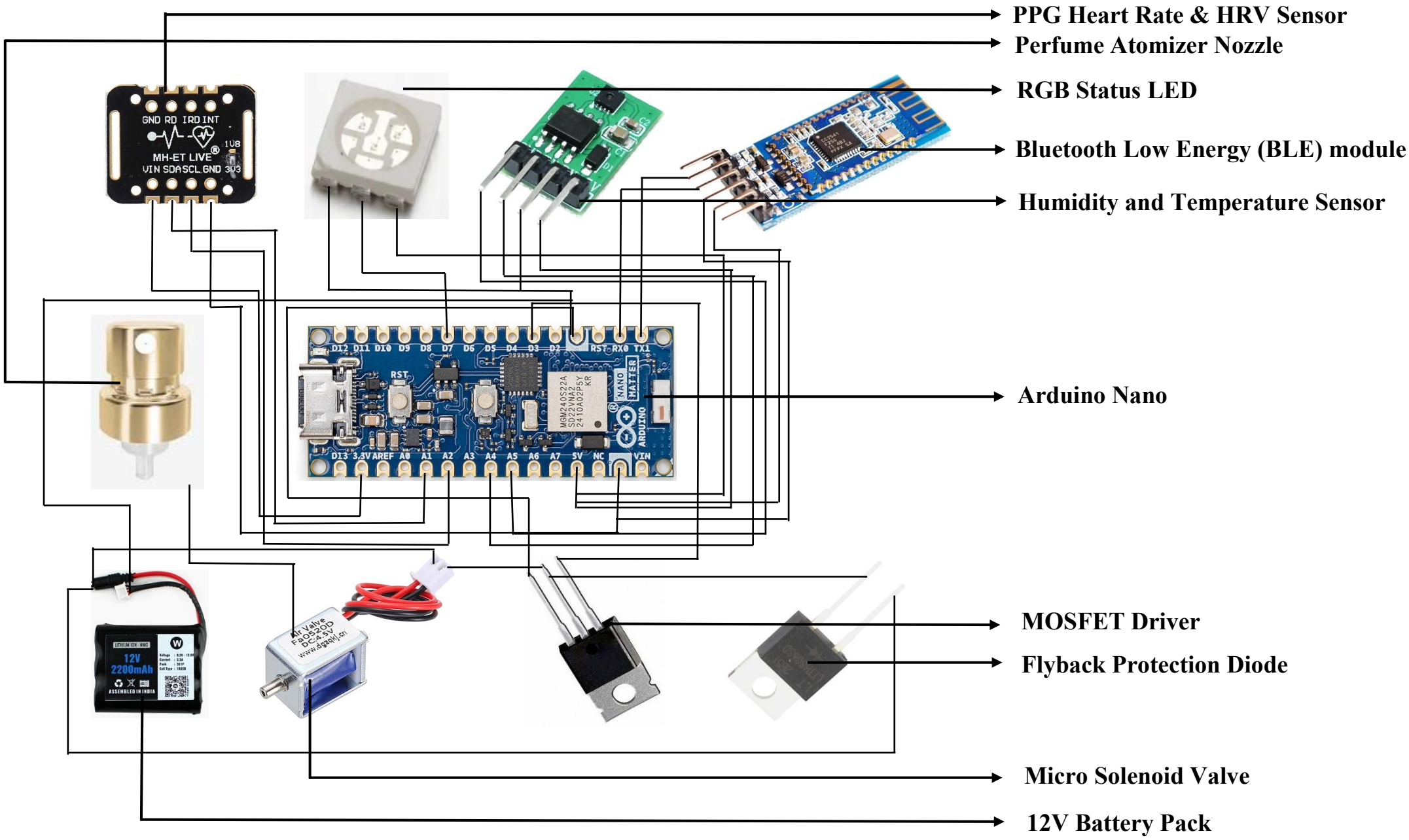
PPG Heart Rate & HRV Sensor
Perfume Atomizer Nozzle
RGB Status LED
Bluetooth Low Energy (BLE) module
Humidity and Temperature Sensor
Arduino Nano
MOSFET Driver
Flyback Protection Diode
Micro Solenoid Valve
12V Battery Pack
GND RD IRD INT
MH-ET LIVE
VIN SDA SCL GND 3V3
12V
2200mAh